REGULAR MEETING

LANDMARKS & HERITAGE ADVISORY BOARD
THURSDAY, JUNE 25, 2015- AGENDA
Third Floor Executive Conference Room
6000 Main Street SW
6:00 PM

1. **Call to Order**

2. **Meeting Protocol**
   a. Roll call
   b. Acceptance/changes to agenda
   c. Approval of minutes from April 23, 2015
   d. Announcements

3. **Public Communications**

4. **Unfinished Business**
   - Historic Fort Steilacoom designation request

5. **New Business**
   - Lakewold Sunroom- Introduction
   - Project Ideas for Future Grant Opportunities

6. **Public Hearing**
   (None)

7. **Next Meeting**
   - July 23, 2015

8. **Adjournment**

Members: Please call Karen Devereaux at 253-983-7767 by Tuesday if you are unable to attend. It is important to establish in advance whether or not there will be a quorum. Thank you.

	LANDMARKS & HERITAGE ADVISORY BOARD April 23, 2015 Minutes Third Floor Executive Conference Room 6000 Main Street SW Lakewood, WA 98499

CALL TO ORDER
At 6:02 p.m. the meeting was called to order by Ms. Stephanie Walsh, Chair.

MEETING PROTOCOL

Roll Call
Landmarks & Heritage Advisory Board Members Present: Stephanie Walsh, Chair; Glen Spieth, Vice-Chair; Joan Cooley, and Beth Campbell
Landmarks & Heritage Advisory Board Members Excused: Dennis Dixon and Bob Jones
Landmarks & Heritage Advisory Board Members Absent: Bill Harrison and Walter Neary
Council Liaison to LHAB: Councilmember John Simpson
Staff Present: Dan Catron, Planning Manager; Karen Devereaux, Administrative Assistant

Acceptance/Changes to Agenda
There were no changes made to the agenda; accepted as written.

Approval of Minutes
Ms. Stephanie Walsh, Chair, opened the floor asking if there were any additions, changes or modifications to the March 26, 2015 meeting minutes. Ms. Beth Campbell noted the misspelling of Lakewold Gardens.

Ms. Beth Campbell made the motion to approve the minutes with a change to Page 2, under the heading of New Business, lines 1 and 5; the word Lakewood was changed to Lakewold. The motion was seconded by Mr. Glen Spieth, Vice-Chair. A voice vote was taken and the motion carried unanimously.

Announcements
During the March 26th meeting, Ms. Stephanie Walsh, Chair, asked for LHAB support in submitting a letter favoring the efforts to add a bridge-walk to improve handicap accessibility on the Lakewold Gardens grounds. Ms. Walsh thanked all members for their support and informed the group she had received the letter of award for the grant of $5,000.

Mr. Glen Spieth, Vice-Chair, informed members he is ready to place the large boulder markers and plaques at two historic sites. With assistance from a logging truck equipped with a self-loader he feels prepared for the job. Mr. Spieth selected a location at the Heath Farms in a grassy area between Buildings 1 and 2. At Thornewood Castle he has chosen a spot outside the entrance gate, next to the roadway. Members urged him to call 811 utility and cable locators prior to commencing with any digging as well as checking on City permit requirements with Public Works.

DRAFT

Ms. Joan Cooley queried any new information on the "Acre for the Arts" project of a new Ft. Steilacoom Park Amphitheater. Mr. Dan Catron agreed to look into more details when asked that he keep the LHAB members informed of developing news.

PUBLIC COMMUNICATIONS
None

UNFINISHED BUSINESS
Mission Statement - Review and Update
All members present agreed the revised statement below fit best.

"The mission of the City of Lakewood's Landmarks & Heritage Advisory Board is to preserve, protect and promote the unique heritage and historic resources of the City of Lakewood."

Ms. Joan Cooley made the motion that Landmarks & Heritage Advisory Board adopts the revised mission statement as written. The motion was seconded by Mr. Glen Spieth, Vice-Chair. A voice vote was taken and the motion carried unanimously.

NEW BUSINESS
Pierce County Historic Preservation Grant
A funding opportunity was announced with grant amounts up to $15,000, the caveat is recipients must provide 100% match, with applications being due July 1, 2015. Ms. Stephanie Walsh, Chair, reiterated that the LHAB members previously decided to take this season to prepare for the 2016 application deadline with the strategy of pooling 2 years of funding to meet any grant match requirements.

Ms. Stephanie Walsh, Chair, agreed to contact Ms. Debbie LeBeau, CPSD Superintendent, regarding this grant for possible use in preservation and/or relocation of the Little Red School House on school-owned property. In brainstorming ways to support with efforts, Ms. Walsh voiced an idea of recruiting summer-reunion alumni to raise match funds for a possible school district related grant application.

Historic Fort Steilacoom Designation Request
Mr. Dan Catron shared a formal request letter received from the Historic Fort Steilacoom Association Director, Kenneth Morgan, asking that the four remaining buildings of Fort Steilacoom, located on the campus of Western State Hospital, receive a designation as a community landmark.

Ms. Stephanie Walsh, Chair, queried if it appropriate to first request a letter of confirmation from Department of Social and Health Services stating they have no objections to such a designation before the LHAB moves on the HFSA request. Mr. Dan Catron agreed to contact DSHS before the May meeting.

Members Mr. Glen Spieth, Vice-Chair, and Ms. Beth Campbell asked staff to check on a nomination form they believe was written by Steve Dunkleburger, Past Chair, in relation to same project. Mr. Dan Catron agreed to attempt to locate the document for review at the May meeting.

PUBLIC HEARING
None

OTHER

Ms. Stephanie Walsh, Chair, reminded members of the September 14, 2015, Joint Council Meeting to be held in Council Chambers at 7:00 p.m.

Mr. Glen Spieth, Vice-Chair, was asked to lead another group discussion about the list of different projects for grant opportunities at the May meeting. Ms. Joan Cooley suggested the group consider naming historic roadways to preserve and promote recognition and awareness of long-time landmarks like Military Road and Angle Lane SW, which were used to travel directly to Yakima from the Fort Steilacoom area. Ms. Stephanie Walsh, Chair, added that old lake names from public parks near water could be considered in that project list.

Next Meeting is scheduled for 6:00 p.m. on Thursday, May 28, 2015.

Agenda Items to include:

- DSHS Confirmation Letter of No Objection with Community Designation Request by HFSA
- Nomination Materials for Historic Fort Steilacoom
- Member Developed List of Possible Future Projects for Grant Application Consideration

Meeting Adjourned at 7:00 p.m.

_____ 6/25/2015__	_____6/25/2015___
Stephanie Walsh, Chair Landmarks & Heritage Advisory Board	Karen Devereaux, Secretary to the Landmarks & Heritage Advisory Board

Fort Steilacoom

Dan Catron
City of Lakewood
6000 Main Street
Lakewood Washington 98499

April 8, 2015

Subject: Community landmark designation

Sir:
Please consider this a formal request for a designation as a community landmark for the four remaining buildings of Fort Steilacoom located on the campus of Western State Hospital as we recently discussed on the phone.

These buildings are operated as a museum complex under a long term lease granted by DSHS by the Historic Fort Steilacoom Association (HFSA). DSHS has no objection to such a designation.

Please advise as to the steps required to complete the process.

Kenneth Morgan
Director HFSA

RECEIVED
APR 10 2015
COMMUNITY DEVELOPMENT

Historic Fort Steilacoom Association, P.O. Box 88447, Steilacoom, WA 98388 . (253) 582-5838
Web Site: www.historicfortsteilacoom.org e-mail: info@historicfortsteilacoom.org

Lakewood Historic Register

Nomination Form

I. Applicant Information

Date	June 25, 2015
Name	Kenneth Morgan- Historic Fort Steilacoom Association
Street Address	P.O. Box 88447
City State Zip Code	Steilacoom, WA 98388
Home Phone	
Work Phone	(253) 582-5838
E-Mail Address	

II. Owner Information

Name	WA State DSHS- Western State Hospital
Street Address	8805 Steilacoom Blvd. SW
City State Zip Code	Lakewood, WA 98498
Home Phone	
Work Phone	(253) 582-8900
E-Mail Address	

III. Property Information

Historic Name	Fort Steilacoom buildings
Other Names	
Location	On the grounds of Western State Hospital
Tax Parcel Number	
Legal Description	Acreage bordered by Cottage Row, Fort Street and Sequoia and nearby tree-lined pioneer cemetery west of the Fort buildings, at the center of the hospital complex.

IV. Classification of Property

Ownership of Property	Number of Resources Contributing	Non-Contributing	Non-Contributing
___ Private	_X_ Building(s)	___ Building(s)	___ Building(s)
___ Public-Local	_X_ District	___ District	___ District
_X_ Public-State	_X_ Site	___ Site	___ Site
___ Public-Federal	_X_ Structure	___ Structure	___ Structure
	_X_ Object	___ Object	___ Structure
	_9__ **Total**	_0_ **Total**	_0_ **Total**
Historic Name Fort Steilacoom		Name of related multiple property listing	
Number of contributing resources previously listed as Pierce County Landmarks 5		Number of contributing resources previously listed on National Register 5	

V. Function or Use

Historic Uses and Property Owners	Current Uses
Owned by DSHS but operated as a museum by the non-profit Historic Fort Steilacoom Museum Association	Used for museum complex by volunteer historical preservation group

VI. Property Architectural Description

Materials			
Foundation: concrete frame	Siding: wood	Roof: cedar	Windows: historic or replicas
Other: Post and pier	Other:_____	Other:_____	Other:_____
Architectural Description:			

Describe the present and historic physical appearance of the property below and on the continuation sheet. Use as many sheets as necessary.

(Adapted from the National Register nomination form prepared by Cy and Rita Happy, 1975)

The four remaining fort buildings were restored in the 1970s and 1980s and are used to provide hands-on experiences of fort life during the 1849 to 1868 period of local settlement.

The historic fort buildings are all former officers' and surgeon's residences located immediately to the east of the main Western State Hospital complex. The four buildings are arranged on a loop road around the perimeter of a five-acre parade ground which remains as open space. The three buildings on the north side of this field were included in "Officer's Row" while the fourth structure on the east side was the post surgeon's quarters. The buildings were all built in 1857 by Lieutenant August Kautz following standard U.S. army plans. In terms of architectural style, they are a rudimentary Greek Revival.

These structures are quite similar to one another with some variations depending upon the rank or status of the intended occupants. Basically they are one-and-a-half story rectangular plan buildings with gable roofs—ridges oriented parallel to the street- and clapboard siding. The buildings include gable dormers, returned cornices and two chimneys each, positioned near opposite ends of the ridge, each with a corbelled cap and a hound's-tooth course.

There are full-width hipped roof verandas across the front of the buildings. These are supported by boxed columns with a simple capital and base built up from boards and mouldings. On the surgeon's quarters at the end of officer's row, the veranda is extended around the corner along the south end of the building. A latticework screen is provided on both ends of all verandas- possibly to provide a degree of privacy from closely neighboring porches on either side. Additional lattice work is used beneath the verandas as a foundation skirt.

The windows have a six-over-six double hung sash placed in a strict symmetrical arrangement. The paneled door of the front entrance is framed by transom and sidelight windows.

The field officer's quarters are the simplest architecturally. They are provided with a single dormer smaller than the dormer for the surgeon's residence, which has a pair of windows where the others only have one. Although the surgeon's residence has a more extensive veranda, the commanding officer's quarters is significantly larger. It has three dormers- two of them with single windows flanking a third larger dormer with a pair of windows. Also it is embellished by a more elaborate chimney treatment and cornice brackets that are not used elsewhere.

The structure at the west end of the row is in relatively good condition with little apparent alteration other than a small addition at the back. However, the commanding officer's quarters has had one chimney removed and some interior plasterwork removed exposing a brick infill

between the studs of the outside walls. On the building at the east end of the row the porch has been rebuilt without replicating the original columns or lattice-work.

At the center of the hospital grounds is the Fort Steilacoom military cemetery on a fenced acre of ground.

Reference: The History of Fort Steilacoom
By John McPherson

HISTORY OF FORT STEILACOOM

By John McPherson

Origins (1849-53)

In the aftermath of the U.S.-Mexican War and facing the rapid settlement of the Pacific Coast in the wake of the California Gold Rush, the U.S. Army established Fort Steilacoom to both project American power and secure American interest in the Puget Sound Region of what was then, the Oregon Territory. Fort Steilacoom was a key element in America's new Pacific Defense system.

First manned by soldiers of Company M, 1st Artillery Regiment beginning in August 1849, the fort's first buildings were built on land leased from the Hudson's Bay Company. Upon this site, the artillerymen erected simple log structures. By 1853, Fort Steilacoom was now a part of the new Department of the Pacific and the embryonic Washington Territory.

Expansion of the Fort (1853-55)

Fort Steilacoom grew in size and importance with the arrival of two companies of the 4th Infantry Regiment in 1853. In 1854, soldiers from these companies were detached to assist in survey and road-building work throughout the Puget Sound Region and across the Cascades through Naches Pass. These troops also aided in protecting the property and personal safety of recently-arrived American settlers.

The autumn of 1855 saw significant activity for the post. Recently-signed treaties gave rise to an Indian insurgency on both sides of the Cascades. Following a series of murders in the White River Valley (located north of the fort), Fort Steilacoom served as a temporary refuge for settlers fleeing the carnage and threat of violence.

Steilacoom was seriously undermanned at this time; most of its troop complement had taken the field. Skirmishing and patrols of both Regulars and Volunteer troops took place during the autumn of 1855. Ft. Steilacoom took on the appearance of a fort under siege. It was in December 1855 that Ft. Steilacoom lost one of its favorite officers, Lt. William Alloway Slaughter in an ambush along the Green River. Lt. Slaughter, and two of his enlisted soldiers, were brought back to the post for burial in the midst of a full-scale insurgency.

Arrival of the 9th Infantry Regiment (1855)

General John Wool dispatched the first Regular Army reinforcements to Ft. Steilacoom in November 1855 with the deployment of one company of soldiers from the 3rd Artillery Regiment commanded by Capt. Erasmus Darwin Keyes. They were followed shortly by the arrival of a new post commander, Lt. Colonel Silas Casey of the 9th Infantry Regiment.

Several companies of the 9th, with Keyes's artillery troops, and troops of the 4th Infantry marched out of Ft. Steilacoom in February 1856 to confront Indian insurgents along the Naches Pass Road. In conjunction with soldiers of the Washington Territorial Volunteers and allied Native Americans, the American forces engaged in aggressive patrolling and occupation of key trails and traditional food-gathering sites of the Native American insurgents.

Several sharp firefights occurred near the White River, particularly in the area of Connell's Prairie in today's community of Bonney Lake. A successful raid on the insurgent camp near the Mashel River by Indians under the leadership of Patkanim effectively crushed the Native American resistance in the area. Later raids by volunteer "rangers" and the failed attempt to wipe out the fledgling settlement of Seattle undoubtedly weakened the resistance movement.

By late March of 1856, the Puget Sound phase of the wider Yakama War had concluded. Continued murders and fighting occurred, but none involved the Federal troops of Ft. Steilacoom.

Incarceration of Leschi & New Construction at the Fort (1856-58)

The betrayal of lead insurgent, Leschi of the Nisqually, by his former allies and his ensuing two trials strained relations between the officers of the fort and local civilian authorities. Leschi remained incarcerated at Ft. Steilacoom after a failed attempt on his life in the office of none other than Washington Territorial Governor, Isaac Stevens.

Although Lt. August Kautz presented convincing evidence at trial proving Leschi's innocence regarding the murder charges levied against the chief, Leschi was declared guilty based on "new" evidence provided in the form of eyewitness testimony newly-discovered in the second trial. A legal controversy ensued between Territorial government officials and the fort's officers as to how to proceed with carrying out Leschi's death sentence. Lt. Kautz vigorously defended the innocence of Leschi in a series of print articles under the title of "The Truth Teller." In the end, Leschi was hung by civil authorities, not Regular Army troops. Lt. Col. Casey demanded that Leschi be executed at least 300 yards off post and that his men not be involved in the affair.

In 1857, Casey secured Federal funds to expand and modernize Ft. Steilacoom as befitting its status as district headquarters and its expanding role in local affairs. The fort now served as the central hub for military operations in the Puget Sound region, operations that included local security, road-building, and frontier constabulary. Lt. August Kautz supervised the removal of the original log buildings and the construction of new stick-frame and brick structures. Kautz utilized the labor of both soldiers and civilian contract laborers in the raising of new fort buildings. Foundation bricks were fired on site, finish lumber was purchased from local mills, and Kautz employed an innovative water ram to increase the speed of construction.

San Juan Island "Pig War" & the Military Road (1859-60)

Fort Steilacoom was nearly emptied of all of its troops as a result of the so-called "Pig War" of the summer and autumn of 1859. This boundary dispute involving the San Juan Islands gave rise to a massive build-up of American troops on the southern tip of San Juan Island.

Initially, only one company of 9th Infantry troops under the command of Capt. George Pickett had been ordered to establish a presence on the island. When confronted with the overwhelming superiority of firepower and numbers of the British Navy in the vicinity, Pickett hastily called for reinforcements. His request was granted in the form of nearly 500 artillery, infantry, and engineer troops under the command of Lt. Col. Silas Casey.

Upon arriving on the island, Casey wisely moved the camp started by Pickett to a less-exposed position, he began the construction of a redoubt intended for large guns, and he engaged in friendly, diplomatic conversation with his British counterparts anchored offshore.

The American encampment and redoubt project lasted only a short time. By November 1860, negotiations involving General Winfield Scott and British Governor James Douglas settled on the placement of a company-sized element from both countries on either end of the island. The first American company to be stationed on the island at the conclusion of negotiations was Company C of the 4th Infantry from Ft. Steilacoom. This company was commanded by Captain Lewis Cass
Hunt and Lt. Arthur Schaaf while on the island until it was withdrawn and replaced in April 1860 by
Captain Pickett's company of the 9th Infantry. In 1861, Ft. Steilacoom would provide another company to the island's defense; Capt. Thomas English of Company H/9th Infantry would replace Pickett's company.

Concerns over the supply of, communications with, and reinforcement of military posts from Vancouver Barracks to the Cowlitz River to Ft. Steilacoom and northward to Ft. Bellingham led to plans for construction of a military road between these points. Survey work was completed by soldiers of the 9th Infantry assigned to Ft. Steilacoom and contracts were awarded to various speculators for the construction and maintenance of this new road. While a rough-hewn, east-west freight road had been initiated between Ft. Steilacoom and Walla Walla using the Naches Pass route, this new north-south route would never be completed. Events back east would dry up Federal funds for the project.

American Civil War Period (1861-65)

News of the presidential victory of Abraham Lincoln reached Ft. Steilacoom in early December 1860. Southern states almost immediately began to secede from the United States in response to Lincoln's election. Federal arsenals across the South were seized and their contents redistributed to rapidly mobilizing rebel forces. In response to this threat, Lincoln called for the concentration of Federal troops in the East. Ft. Steilacoom was a flurry of activity as its companies packed and prepared to assemble with their respective regiments in ports in California.

Upon redeployment to the East, the Regular soldiers of Ft. Steilacoom would be a part of the Federal Division, the trained, professional nucleus within what would become a primarily volunteer force formed for the purpose of putting down the rebellion of Southern states. Soldiers of the 4th Regiment assembled with their fellow companies in Southern California for transport to the East Coast. Soldiers of the 9th Regiment expected to do the same. Threats of Confederate sympathizers and the potential for both foreign and Native-American attack convinced President Lincoln to keep the 9th Infantry on the West Coast for the duration of the Civil War.

The draining of Federal troops from Ft. Steilacoom necessitated the recruitment of volunteer troops to take their place. Washington Territory was never able to recruit enough men to fill the ranks of an entire regiment. Instead, the territory supplied two companies of troops and filled the rest of its allotted regiment with California Volunteers. During the American Civil War, Ft. Steilacoom was manned by companies G and K of the 1st Washington Infantry Regiment as well as by soldiers from the 1st Oregon Infantry Regiment and Company E of the 4th California Infantry Regiment. These volunteer troops were a part of a much larger organization of West Coast regiments called the Army of the Pacific.

In the absence of Regular Army soldiers, these citizen-soldiers took on the task of maintaining the peace between Native peoples and often hostile whites. They also improved and protected established communication and transportation routes.

Post-Civil War Period & Transfer to the Territory (1865-68)

By the middle of April 1865, citizens of the town of Steilacoom and volunteer troops at Ft. Steilacoom had received the news of the Confederate surrender at Appomattox.

Even before the end of war, volunteer officers had tendered their resignations and the companies of volunteer troops had begun to dwindle in size. After the war, soldiers of the 14th Infantry Regiment were stationed briefly at Fort Steilacoom. But, by 1868, new Indian insurgencies east of the Cascades prompted General Halleck to reallocate U.S. Army resources.

Many of the posts established on the West Coast during the 1850s were closed, including Ft. Steilacoom. The 640 acre fort and farm site was turned over to the Washington Territory.

In 1871, Territorial officials used the fort's buildings and property as the "Insane Asylum of Washington Territory." This asylum would continue to grow over the years. Many of the post's original 1857 buildings would be torn down and replaced by newer, more modern facilities to support the needs of the asylum. Later, the asylum replaced its territorial name with the moniker, "Western State Hospital."

Modern Period (1983-Present)

Today, four of the fort's original buildings remain on site, open to visitors and school groups alike. The post's Catholic chapel was moved in 1864 and currently serves an active congregational gathering place in downtown Steilacoom, not far from the fort.

Beginning in 1983, local volunteers raised funds and donated generously of their time and skills to renovate and restore the original officer's homes that had been left in disrepair. This dedicated group formed the Historic Fort Steilacoom Association to not only restore the buildings, but also interpret the site for future generations.

The association currently sponsors monthly events and activities promoting the history and personalities associated with Ft. Steilacoom. The HFSA is a non-profit organization run by volunteers whose Board meets each month to determine the direction of the fort's interpretation. These volunteers host various work parties, living history demonstrations, guided tours of the fort buildings, & lecture programs. The HFSA also operates an on-site museum and gift store that is open to the public throughout the year.

VII. Register Criteria

Check all that apply

The Property:

X	1. Is more than 50 years old or, if a proposed landmark district, contains resources that are more than 50 years old.
X	2. Possesses integrity of location, design, setting, materials, workmanship, feeling and association.
X	3. Is associated with events that have made a significant contribution to the broad patterns of national, state, or local history.
X	4. Embodies the distinctive architectural characteristics of a type, period, style, or method of construction, or represents a significant and distinguishable entity whose components may lack individual distinction.
X	5. Is an outstanding work of a designer, builder or architect who has made a substantial contribution to the arts.
X	6. Exemplifies or reflects special elements of the City's cultural, economic, political, aesthetic, engineering or architectural history.
X	7. Is associated with the lives of persons significant in national, state or local history
X	8. Has yielded or is likely to yield important archaeological information.
X	9. Is an integral part of districts that meet the criteria above.
___	10. Is a religious property deriving primary significance from architectural or artistic distinction or historical importance.
___	11. Is a building or structure removed from its original location but which is significant primarily for its architectural value, or which is the only surviving structure significantly associated with an historic person(s) or event.
X	12. Is a birthplace or grave of a historical person of outstanding importance and is the only surviving structure or site associated with that person.
X	13. Is a cemetery that derives its primary significance from age, from distinctive design features, or from association with historic events or cultural patterns.
X	14. Is a reconstructed building accurately executed in a suitable environment and presented in a dignified manner or as part of a restoration master plan, and no other building or structure with the same association has survived.
X	15. Is a property commemorative in intent of design, age, tradition, or symbolic value that has invested it with its own historical significance.
___	16. A property achieving significance within the past forty years, if it is of exceptional importance.
X	17. Is an easily identifiable visual feature of a neighborhood or city and contributes to the distinctive quality or identity of such neighborhood or city.
X	18. Is associated with significant historic events or historic themes.
___	19. Is associated with important or prominent persons in the community, or recognized by local citizens for substantial contributions to the neighborhood or community.

VIII. Areas of Significance

Period of Significance: 1849-68	Significant Dates: 1854- 1865
Significant Person(s): Casey, Hunt, Grant, Custer, Kautz, Leschi, soldiers, refugees from Indian war of 1856-58. *Complete if criteria 7 is checked.*	Cultural Affiliation: US Military *Complete if criteria 8 is checked.*
Architect/Builder: August Kautz	

Statement of Significance:

Describe the significance of the property, using the criteria checked, criteria definitions, and areas and the periods of significance noted above. Use as many continuation sheets as necessary.

First US military fortress presence in the Puget Sound area.

X. Form Preparation

Form was prepared by: Steve Dunkelberger/ Dan Catron

Name (printed)	Dan Catron
Signature	
Date	June 25, 2015

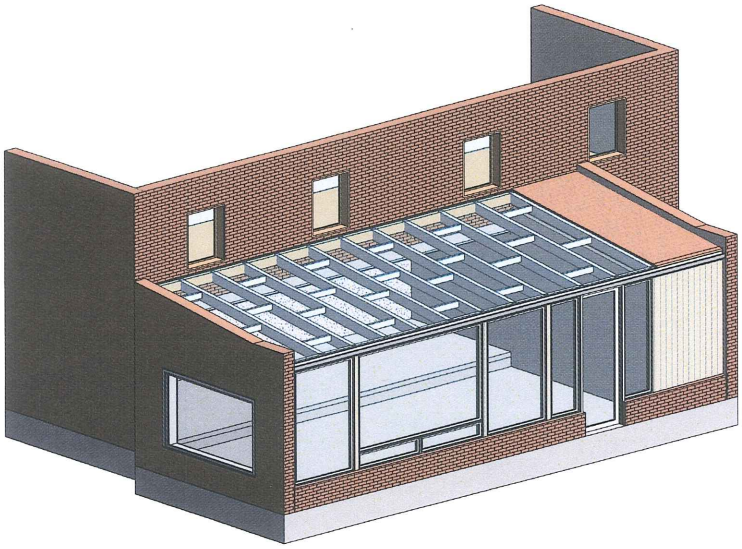

4 3D EXTERIOR VIEW - HORIZ MULLION

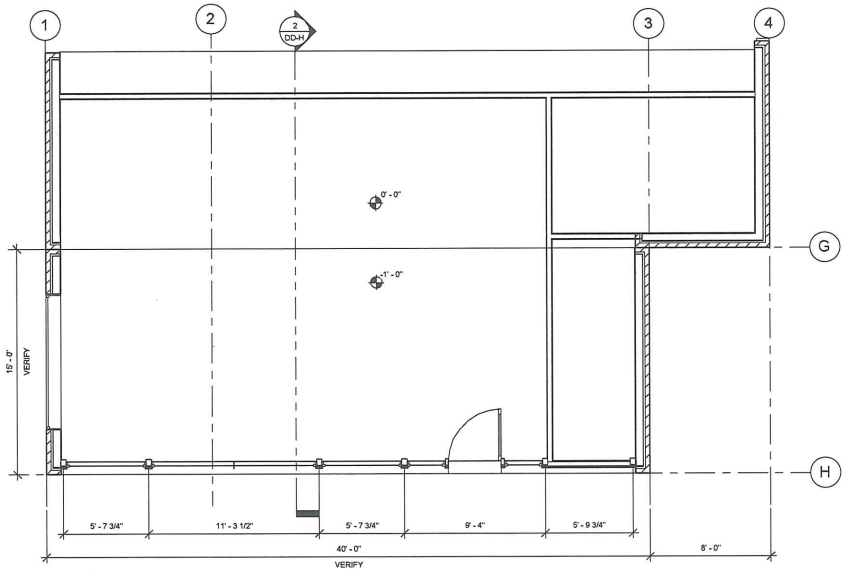

1 PLAN VIEW - HORIZ MULLION
1/4" = 1'-0"

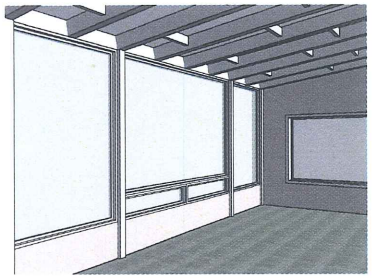

5 3D INTERIOR VIEW - HORIZ MULLION

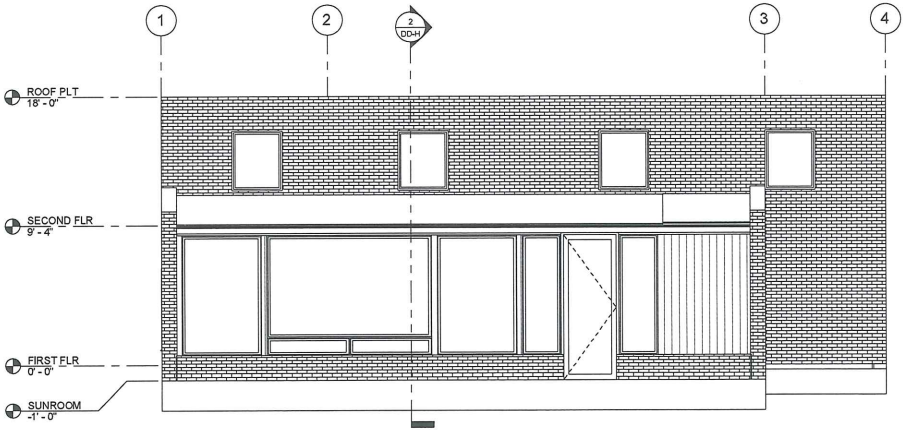

3 SOUTH ELEV - HORIZ MULLION
1/4" = 1'-0"

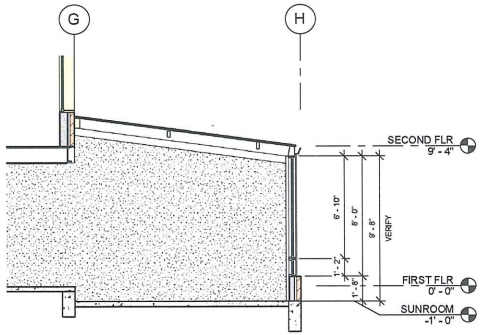

2 SECTION N/S - HORIZ MULLION
1/4" = 1'-0"

ARCHITECTS, PLLC
601 St. Helens Ave, Tacoma, Washington 98402 Phone: (253) 922-4168 Fax: (253) 922-7391

Design Development - Horizontal Mullion
Lakewold Gardens - Sunroom
05/08/15

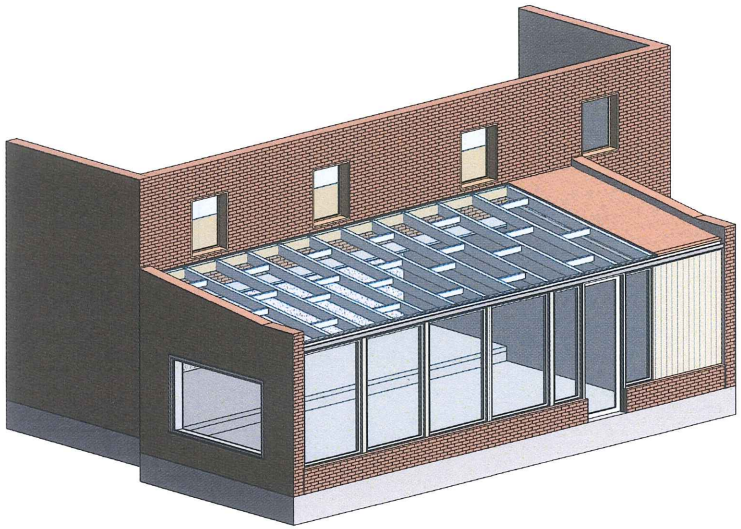

4 3D EXTERIOR VIEW - VERTICLE POST

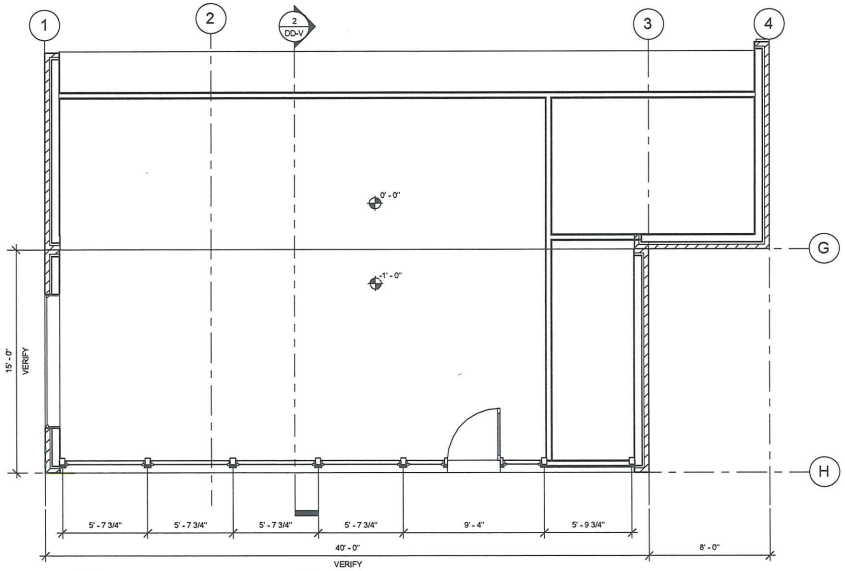

1 PLAN VIEW - VERTICLE POST
1/4" = 1'-0"

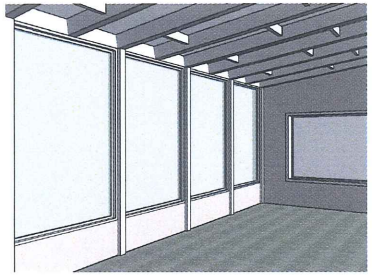

5 3D INTERIOR VIEW - VERTICLE POST

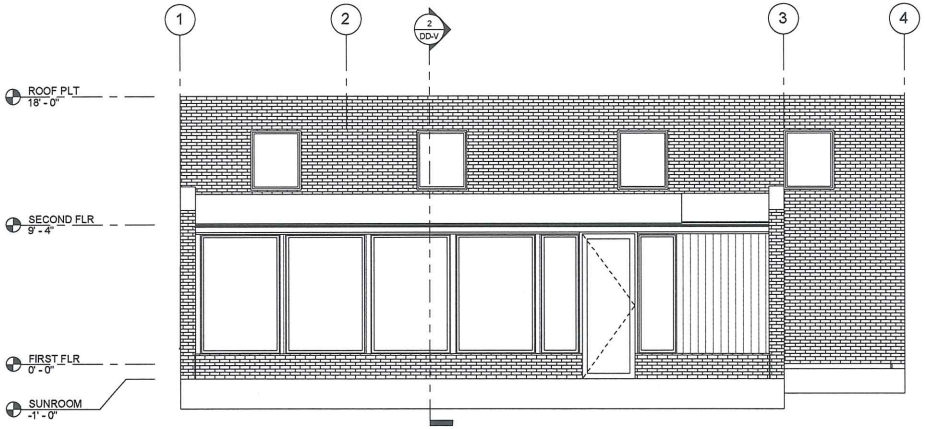

3 SOUTH ELEV - VERTICLE POST
1/4" = 1'-0"

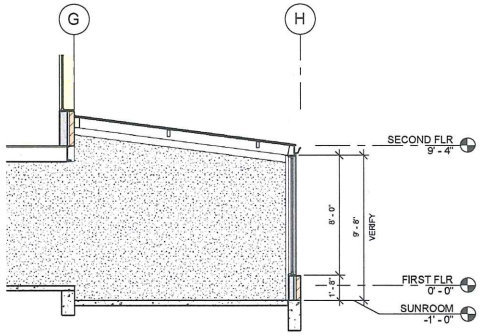

2 SECTION N/S - VERTICLE POST
1/4" = 1'-0"

ARCHITECTS PLLC
601 St. Helens Ave, Tacoma, Washington 98402 Phone: (253) 922-4169 Fax: (253) 922-7391

Design Development - Verticle Post
Lakewold Gardens - Sunroom
05/08/15

Pierce County
Department of Planning and Land Services
DENNIS HANBERG
Director

2401 South 35th Street
Tacoma, Washington 98409-7460

RECEIVED
JUN 08 2015
COMMUNITY DEVELOPMENT

June 3, 2015

Dan Catron, AICP, Principal Planner
Historic Preservation Office
City of Lakewood
6000 Main Street SW
Lakewood, WA 98499-5027

RE: 2015 Pierce County Historic Preservation CLG Funding

Dear Mr. Catron:

I am pleased to inform you that at their regular January 20, 2015 meeting, the Pierce County Landmarks & Historic Preservation Commission unanimously voted to award the City of Lakewood Historic Preservation Office $5,000 for use on projects or training in 2015.

Please submit a brief scope of work similar to those you submit for the regular grant funding cycles. We must have a current W-9 and insurance certificate on file. Also, if you propose any type of building repair or maintenance, Pierce County must be included as a loss payee. The funds for projects you are working on this year could include markers, document preservation, building repair, training, etc. Matching funds are not required. For reimbursement, we must receive copies of receipts for any purchases, time cards with date/project name.

We must receive all reimbursement paperwork by **November 30, 2015**. If you have questions, please contact either Chad Williams, cwillia@co.pierce.wa.us or 253-798-3683, or me, sgaffne@co.pierce.wa.us or 253-798-2724.

Sincerely,

Sean Gaffney
Manager, Long Range Planning

c: Caroline Swope, Chair, Landmarks Commission
Kim Burnett, Administrative Program Manager
Chad Williams, Senior Planner
Cory Ragan, Assistant Planner

Long Range Planning\Landmarks Commission\2015\City of Lakewood 6 03 15.docx

Printed on recycled paper